Simulation assignments ECE 271

SPRING 2021

Rules for submitting assignments

1. All assignments are to be submitted to Canvas. Do not email them. I do not grade anything submitted by email.
2. The file name should **START** with your last name and include assignment ID.
3. Assignment submitted 6h – 5 days late are graded at 50%. The time is determined by the latest upload time. Submission is closed after 5 days.

Simulation 1 Thevenin and Norton equivalents (10p)

Consider the circuit below, where you need to set your own value of R1 and R2 resistors.

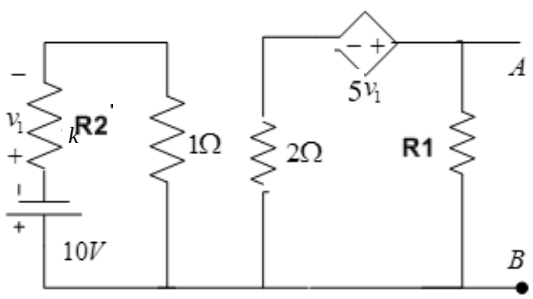

1. Calculate analytically Thevenin voltage, Thevenin resistance and Norton current with respect to terminals A and B.
2. Construct and simulate **three** circuits to find the same values experimentally like we did in the class and compare them with the values found analytically.

Instructions.
1. Your submission should include one file with three circuits or three files with one circuit.
2. The analytical solution can be written on a piece of paper and copied into the description file or typed in the description box. No need to type very detailed solution, it can be short.

Simulation 2. Diode Circuit (10p)

1. Consider problem 3.74(**b**) from 4th edition or 3.68(**b**) from 5th edition, where you **select circuit (d).** Choose your own value for top resistor and using *Von* = 0.5V, find the voltages and currents in both diodes analytically.
2. Simulate this circuit by using virtual diode from the Multisim, measure the values of the current and voltages in the diodes and check your results against the analytical solution. Discuss the difference if any found.
3. Compare the measured *Von* value (which is the voltage of the diodes that conduct) with the *Von* used in analytical calculation. By changing a diode **model parameter** (**you can change only parameter that we studied)**, **EXPERIMENTALLY** find the parameter value that will provide the same *Von* as used in analytical solution. Compare now the simulation results with calculated and draw conclusions.

Instructions.
1. For the diodes, use Virtual Diode
2. If you want the Multisim circuit to look similar to the diagram in the book, you can use the VCC, VDD, VEE, VSS from Power Sources.

Simulation 3. Rectifiers (15p)

1. Design a half wave diode rectifier circuit without the filter (similar to the circuit we considered in class) using an AC voltage source, a diode and a resistor of your choice, where you put the diode on the **bottom** line of the circuit with the anode side to the source and the cathode side to the load resistor,. Simulate the circuit. Your simulation results should include the graph of the following functions: input voltage to the rectifier, load voltage, diode voltage, and load current. Using the graph of your simulation, find the following values: $Vp,\ Vdc,\ Vr,\ Von,\ \Delta T$. All these values should be clearly marked on the graph.
2. Change the direction of the diode and repeat simulation in (1). No need to mark $Vp,\ Vdc,\ Vr,\ Von,$ here. Compare (1) and (2) and draw conclusions.
3. Put the diode in the original direction and find **experimentally** the capacitor value to achieve ripple voltage value about 4 times smaller than in (1). Your simulation graph should include same variables as in (1) plus the current in the diode and capacitor. Using the graph of your simulation, find and mark on the graph the following values: $Vdc,\ Vr,\ \Delta T$.
4. Do experiment (2) now with the capacitor.
5. Analyze and compare (1,2) with (3,4) and make conclusions

Instructions.

1. Do not use transformer, use only AC source.
2. This is a dynamic simulation. Read the Multisim Tips document about how to simulate and graph dynamics.
3. Your submission should include one circuit file with for circuits and one graph file with four tabs showing graphs of all required experiments.
4. For the diodes, use virtual diode.
5. You might need to multiply some variables by a scaling factor to fit all of them in one graph.
6. Do not show many periods on the graph – two periods is enough
7. Your graphs should have smooth curves – you need to calculate enough points for that. Graphs that look like pieces of lines will be considered as errors.

Sim 4. MOSFET *IV* curves (10p)

The goal of this simulation is to build MOSFET *iv* curves for different values of the MOSFET parameters, compare and analyze them.

1. Make a circuit with a PMOS enhancement mode transistor of your choice and two voltage sources. Do a DC Sweep analysis like we did in the class to obtain the output *iv* characteristics. Select appropriate range for the sweep voltages. This will be your base simulation showing output *iv* curves.
2. Starting from the base simulations, one by one, change MOSFET parameters: $K, V_t,\ \lambda, \gamma$, and produce four new output characteristics. Each set should have only one parameter changed with respect to the base simulation. Experiment with the size of the parameter change to achieve about 20% change in IV curves (show only the last good result).
3. Analyze the simulation results and describe what happens to *iv* curves in each case and why.
4. Add a resistor to the output loop and do DC sweep to construct the VTC. Evaluate the gain of the transistor in this circuit by using the obtained graph.

Instructions.

1. Use a transistor from Transistors/TRANSISTORS_VIRTUAL for your simulation.
2. Keep in mind, that for PMOS, all voltages and currents are inverse of NMOS, so you need to correctly assign VDS and VGS when doing simulations.
3. Your submission should include one or two circuit file and one graph file with 6 tabs: one for each set of parameters and additional one for the VTC. Each graph should be clearly marked with the values of parameters in that simulation.

Sim 5. Operational amplifier (15 p)

Consider the op-amp circuit shown below, where $R_1 = 2,\ R_3 = 10,\ R_4 = 4,$ and R_2 you need to select yourself. In the circuit, i_1 is a DC current source with your own selected value, and v_2 is the AC voltage source with frequency and amplitude of your choice.

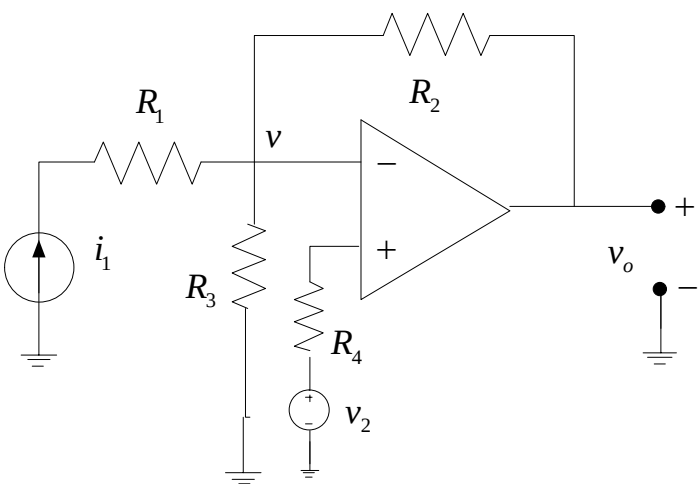

1. Calculate v_o theoretically.
2. Simulate the circuit and compare the experimental v_o with theoretical.
3. Set up the experiments and calculate gain(s) using measurements from the graph of the simulations (make sure that all required voltages and currents are displayed on the graph and the values used in calculations are shown on the graph).
4. Set up the experiments and calculate input resistance(s) using measurements from the graph of the simulation (make sure that all required voltages and currents are displayed on the graph and the values used in calculations are shown on the graph).

Instructions

1. Your submission should include one Multisim circuit file and one graph file with required number of graphs (one graph for each experiment). All graphs should be labeled with the type of experiment and clearly display important simulation parameters.
2. For the Opamp use OPAMP_3T_VIRTUAL from Analog/ANALOG_VIRTUAL
3. The OPAMP in Multisim is a model of a real opamp, and may display unexpected behavior if the voltages and currents are beyond certain limits. To have results similar to what you would expect from an ideal opamp that we use for theoretical calculations, you may need to: a) use smaller values for voltage and current sources and/or b) use the values of resistors that would provide reasonably small currents and/or c) make the op-amp “more ideal” by increasing the supply voltage and by increasing the gain.